MORNINGSTAR
World's Leading Solar Controllers & Inverters

**PRELIMINARY**

# TriStar MPPT™ 600V Controller

## World-Class Performance

Morningstar is pleased to announce the introduction of the TriStar MPPT 600V (TS-MPPT-600V) controller. Our TriStar MPPT controller family commenced production in 2009 and has since become the world's leading photovoltaic (PV) MPPT controller, operating in a myriad of off-grid industrial and residential installations around the globe.

The TS-MPPT-600V leverages our TrakStar MPPT technology and Morningstar's 20 years of power electronics engineering excellence to deliver a PV controller with the widest PV input operating voltage in the solar industry.

## High-Value TS-MPPT-600V Benefits

- Delivers the industry's best-in-class power efficiency
- Uses Morningstar's patented 4-stage charging algorithm to optimize battery health
- Features extensive system networking, monitoring and communications
- Environmentally optimized and equipped with extensive electronic protections
- Offers superior lightning protection from nearby lightning-induced voltage/current spikes
- Engineered with a robust thermal and mechanical design to deliver the highest reliability and performance

## Quality and Reliability

Morningstar's products are ***built from the inside out*** to deliver more than twice the industry average operating life.

The TS-MPPT-600V delivers high reliability and excellent performance and features:

- Robust thermal, mechanical and electrical design.
- Extensive electronic protections.
- No moving parts.
- Epoxy encapsulated components.
- Conformally coated printed circuit boards.

**Features**

- Wide array input voltage range: from battery voltage to 500 Vmp
- Maximum 60A continuous battery current
- Supports nominal 48 or 120 Vdc batteries
- Facilitates simple and cost-effective design and wiring and labor savings
- Enables use of existing high voltage PV for battery charging
- Passively cooled for high reliability
- Compact form factor
- Ethernet standard

TRAKSTAR™
MAXIMUM POWER POINT TRACKING

## TrakStar™ Technology

The TS-MPPT-600V features an advanced MPPT technology to harvest the maximum energy from the solar array's peak power point under all operating conditions. This high-speed processing sweeping methodology enables the TS-MPPT-600V to sweep from the PV open circuit voltage (Voc) to the battery voltage faster than any other similar PV controller.

## Communications

Morningstar's TriStar MPPT controllers are the only PV controllers to offer open communication protocols and true Ethernet-enabled functionality.

The TS-MPPT-600V uses reliable, pre-established industry standard open communication protocols and interfaces to help reduce operational costs and to increase integration efficiencies. As a result, there are neither proprietary network hardware nor software compatibility issues to resolve nor requirement for external gateways. This enables developers to use proven and readily available code to speed development time and and to decrease costs.

- Protocols: Supports MeterBus™, MODBUS™ RTU and MODBUS TCP/IP™, HTTP, SNMP v2 (for system networking and monitoring) and SMTP
- Communication Ports / Interfaces: Ethernet, EIA-485, RS-232 and MeterBus (for flexible communications)
- Data Logging

## Parallel Operation

The TS-MPPT-600V was engineered to support parallel operation. Up to four TS-MPPT-600V controllers may be used in parallel to manage charging from a single solar or wind input. This enables the use of up to 15kWp of high voltage PV or wind for back up power during a grid outage.

## Optimized Battery Health

Morningstar designed the TS-MPPT-600V's battery charging process to deliver long battery life and excellent system performance.

## Simplified Installation and Use

The TS-MPPT-600V controller is built for easy installation, set-up and use. Self-diagnostics and electronic error protections make installation easier and minimize the chances of installation errors and system faults. It is also equipped with 8 adjustable switches to make system set-up and configuration simple. The TS-MPPT-600V's simplified installation and usability benefits include:

- Easy series installation.
- No combiners required.
- Wire cost savings may offset the higher cost of the controller.
- Supports the use of small wire diameter.
- Supports long wire runs.

## Innovation

Morningstar's TriStar MPPT Controllers are the ideal choice for residential, industrial and small commercial installations. These products offer a highly efficient power path for charging batteries with high-voltage strings, thin film and other grid-tie PV modules. The TS-MPPT-600V uses advanced power electronics to efficiently match up to 600Voc PV to 48 or 120 Vdc battery systems. The controller's high voltage capability and flexible design enable several application scenarios including:

- Off-grid PV systems greater than 150 Voc with long wire runs from the array to the controller.
- New installation grid-tie PV systems with battery back-up.
- Retrofitting string inverter systems to later add battery back-up without changing the PV array configuration.
- Off-grid wind systems with battery back-up.

## Off-grid PV systems greater than 150 Voc with long wire runs

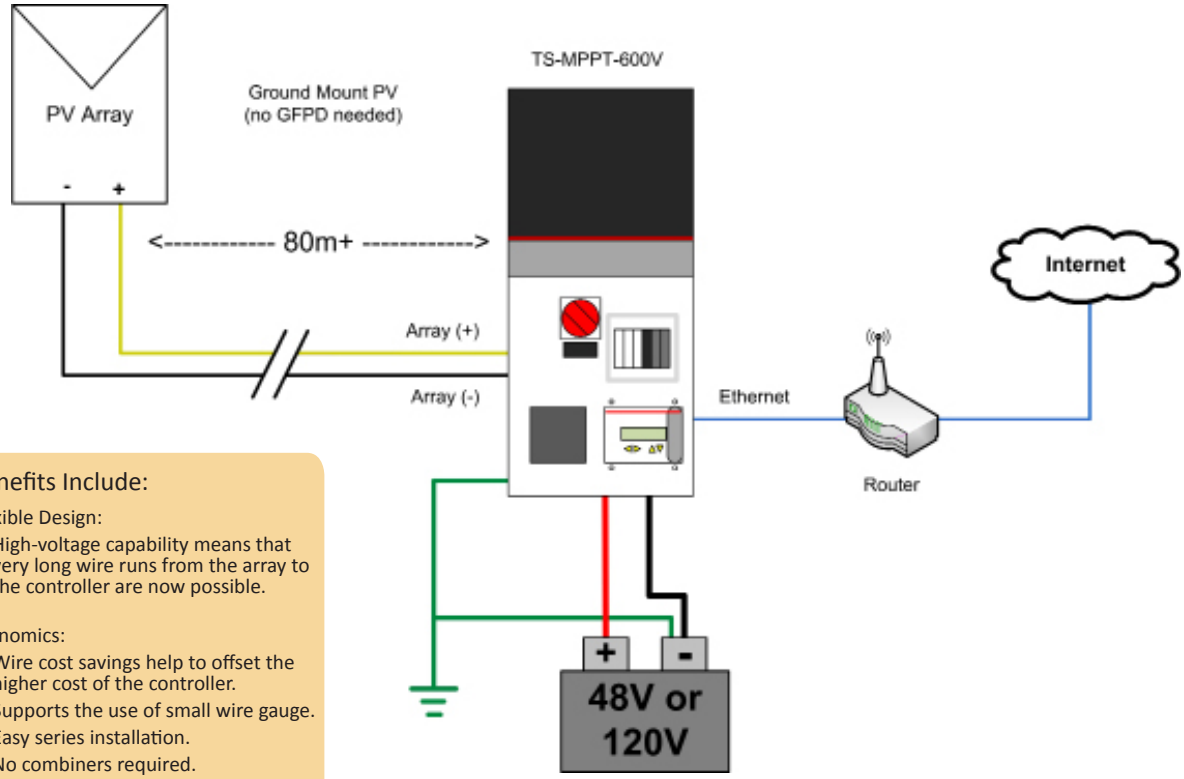


### Benefits Include:

Flexible Design:

- High-voltage capability means that very long wire runs from the array to the controller are now possible.

Economics:

- Wire cost savings help to offset the higher cost of the controller.
- Supports the use of small wire gauge.
- Easy series installation.
- No combiners required.
- Supports long wire runs.

## New installation grid-tie PV systems with battery back-up

### Benefits Include:

- System optimization for high voltage PV and Grid sell. Optimized for better grid-tie inverter conversion efficiency than 48V bus grid-tie systems.
- Cost-effective solution for powering critical loads during a power outage.
- Cost reduction of equipment for back-up functionality and enabling of affordable incremental capacity.
- Back-up inverter sizing exclusively targeted to critical load.

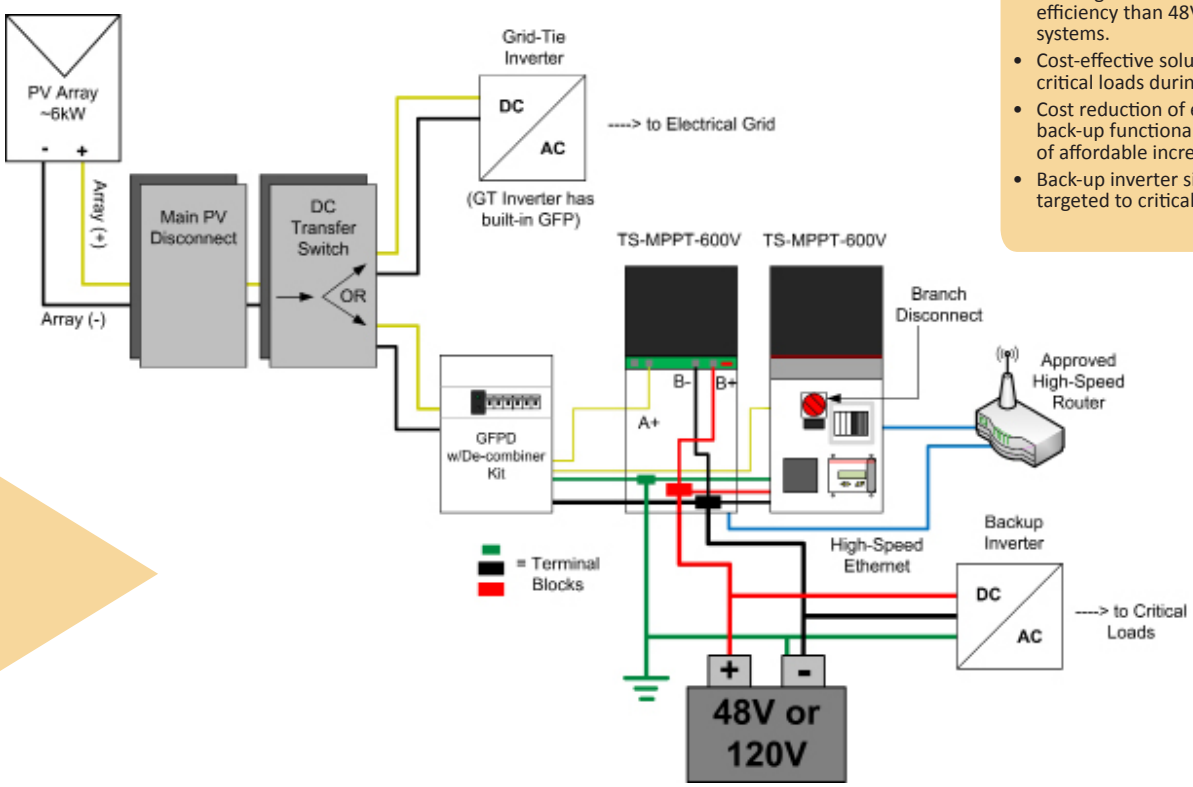

## Retrofitting string inverter systems to later add battery back-up without changing the PV array configuration.

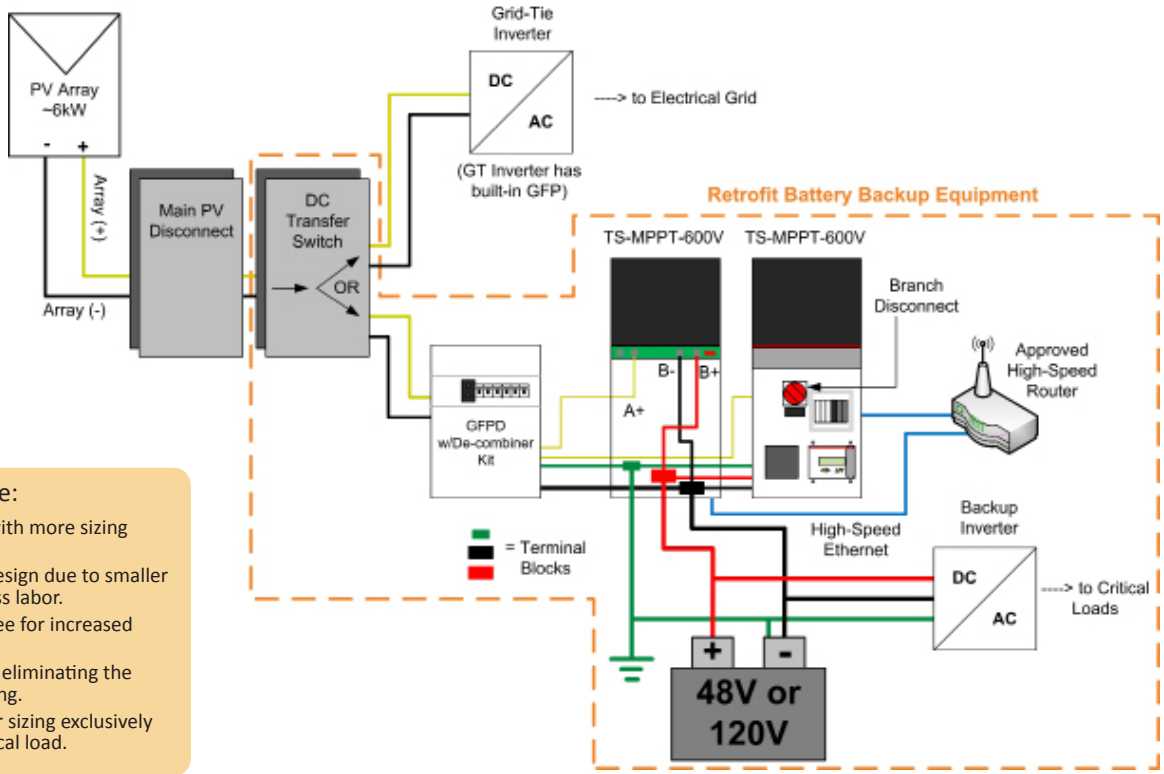


Benefits Include:

- Simple design with more sizing options.
- Cost effective design due to smaller wire size and less labor.
- Maintenance free for increased reliability.
- Wired for 600V, eliminating the need for re-wiring.
- Back-up inverter sizing exclusively targeted to critical load.

## Off-grid wind systems with battery back-up**

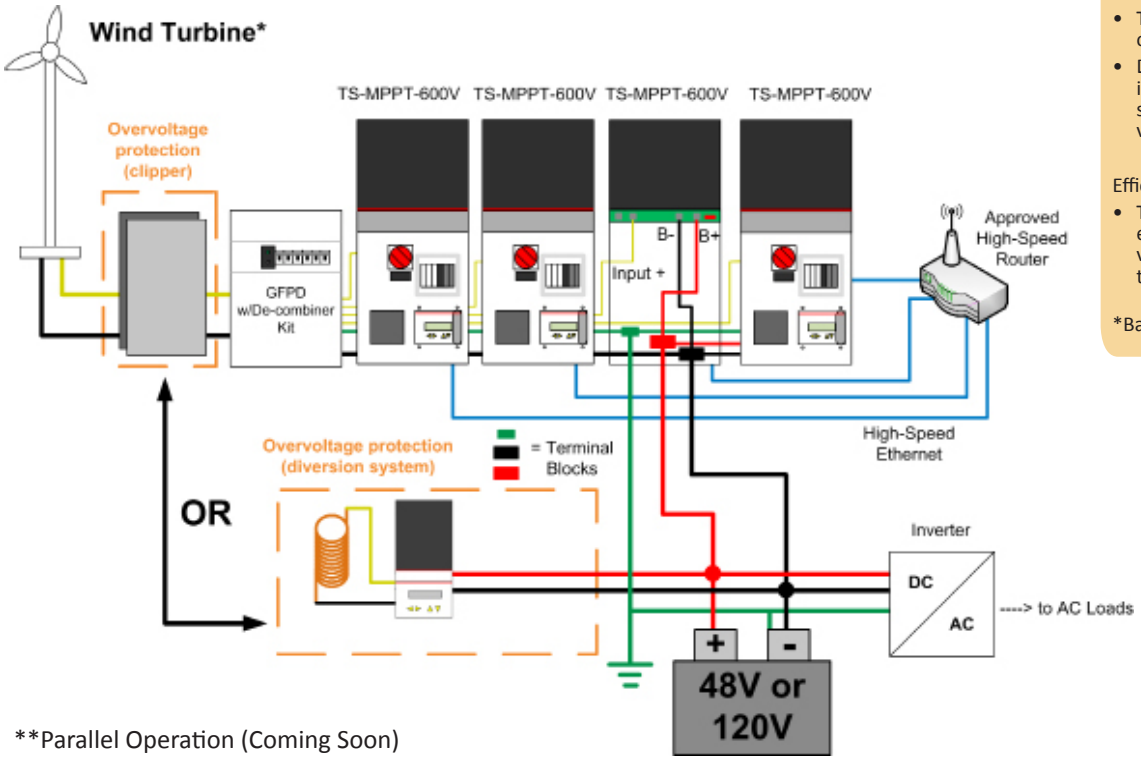


**Parallel Operation (Coming Soon)

Benefits Include:

Cost-Effective Solution:

- Up until now there has not been a way to use large(r) size wind turbines in off-grid installations.
- The TS-MPPT-600V enables the use of larger off-grid wind turbines.
- Designed for up to four controllers in parallel for a 12-15kWp* wind system. Wind may output native voltages up to 600 Voc.

Efficiency:

- The TS-MPPT-600V enables more efficient wind turbine operation via power curve tracking MPPT technology.

*Based on System Load Size.

Morningstar's TS-MPPT-600V:

- Features an advanced digital signal processor and utilizes Morningstar's patented TrakStar™ Advanced MPPT technology to harvest the maximum available energy from the solar array's peak power point within the controller's operating range.
- High-speed processing and control methodology allow sweeps from array Voc to battery voltage in less than 1/10th of a second, faster than all similar controllers.
- Uses Morningstar's patented 4-stage charging algorithm to optimize battery health.
- Features extensive system networking, monitoring and communications.
- Features extensive electronic protections and environmentally tolerant construction.
- Offers superior lightning protection from nearby voltage and current spikes.
- Engineered with a robust thermal and mechanical design to provide the highest reliability and excellent performance.

| | TS-MPPT-60-600V-48 | TS-MPPT-60-600V-120 |
|---|---|---|
| **Electrical** | | |
| Maximum Battery Current | 60A | |
| Maximum Input Current | 15A | |
| Nominal Solar Input | 3200Wp | TBD |
| Peak Efficiency | TBD (~97%) | TBD |
| Nominal System Voltage | 48 Vdc | 120 Vdc |
| Maximum Open Circuit Voltage | 600 Vdc | |
| System Voltage | 14 - 80 Vdc | 85 - 165 Vdc |
| Voltage Accuracy | <= 0.1% +/- 100 mV | |
| Self-Consumption | 1.75 - 2.5 W | |
| Transient Surge Protection | 4500 W / port | |
| **Electronic Protections** | | |
| Input | Overload, Short Circuit, High Voltage | |
| Battery | High Voltage, Battery Sense Disconnected, Remote Temperature Sense Disconnected | |
| General Operation | High Temperature, Reverse Current at Night, Lightning and Transient Surges | |
| **Battery Charging** | | |
| MPPT Algorithm | TrakStar Maximum Power Point Tracking Technology | |
| Charging Algorithm | 4-Stage | |
| Charging Stages | MPPT, Absorption, Float, Equalize | |
| Temperature Compensation | | |
| Coefficient | -5mV/°C/cell (25° ref) | |
| Range | -30 °C to +80 °C<br>-22 °F to +176 °F | |
| **Mechanical** | | |
| Dimensions (Standard Box) | 39.2 x 22.1 x 14.9 cm<br>15.4 x 8.7 x 5.9 in | |
| Dimensions (BOS Box) | 54.2 x 22.1 x 14.9 cm<br>21.4 x 8.7 x 5.9 in | |
| Maximum Wire Size | | |
| Power Terminals | 2.5 $mm^2$ - 35 $mm^2$ / 14 AWG - 2 AWG | |
| RTS/Sense Terminals | 0.25 $mm^2$ - 1.0 $mm^2$ / 24 AWG - 16 AWG | |
| Conduit Knockouts | M20; 1/2, 1, 1-1/4 inch (trade size) | |
| Mounting | Vertical Surface | |
| Enclosure Rating | Type 1 (indoor and vented) | |
| Ingress Protection | IP20 | |
| Unit Weight | 8.98 kg / 19.8 lbs. | |
| **Environmental** | | |
| Ambient Operating Temperature | -40 °C to +45 °C<br>-40 °F to +113 °F | |
| Storage Temperature | -55 °C to +100 °C<br>-67 °F to +212 °F | |
| Humidity | 100% non-condensing | |

| | TS-MPPT-60-600V-48 | TS-MPPT-60-600V-120 |
|---|---|---|
| **COMMUNICATION** | | |
| Ports | Ethernet, EIA-485, RS-232, MeterBus | |
| Supported Protocols | MeterBus, MODBUS RTU, MODBUS TCP/IP, HTTP, SNMP v2, SMTP | |
| Information Display | MSView™ Software, Webpage Server, Email/Text Alerts, LCD Display (optional) | |
| **CERTIFICATIONS** | | |
| | Manufactured in a Certified ISO 9001 Facility | |
| | CE, RoHS and REACH Compliant | |
| | U.S. National Electrical Code (NEC) Compliant | |
| | FCC Part 15 Class B Compliant | |
| | ETL Listed [Canadian ICES-003 and UL-1741 CSA C22.2 No. 107.1-01] | |
| **ACCESSORIES / OPTIONS** | | |
| DC Disconnect Box (DB-1)* | YES | |
| Ground Fault Protection Device (GFPD-600V) | YES | |
| MeterHub™ (HUB-1) | YES | |
| Relay Driver (RD-1) | YES | |
| Meters (On-Board or Remote) | | |
| Universal Meter (UM-1) | YES | |
| TriStar™ Remote Meter-2 (TS-RM-2) | YES | |
| Remote Temperature Sensor (RTS)** | STANDARD | |

* The grounded Balance-of-System box that includes a 600 Vdc PV Disconnect and 48 Vdc Battery Disconnect.
** The RTS is shipped standard with the TS-MPPT-600V, but will require installation when un-boxed.



MORNINGSTAR
World's Leading Solar Controllers & Inverters

www.morningstarcorp.com/TS-MPPT-600V



Specifications subject to change.